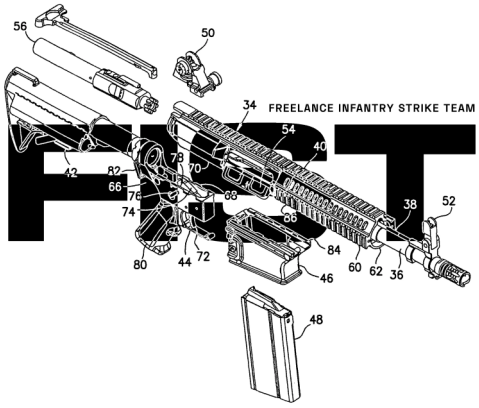

OPERATIVE PROFILE

CODENAME:

ROLE:

TRAITS:

INVENTORY:

FORCEFUL
strength, power, intimidation

TACTICAL
knowledge, skill, intellect

CREATIVE
diplomacy, deceit, psionics

REFLEXIVE
precision, dexterity, aim

ARMOR
subtract from damage taken

MAX HP
capacity to take damage

WAR DICE
luck and grit, spend for +1D6

HP
operative death occurs at 0 HP